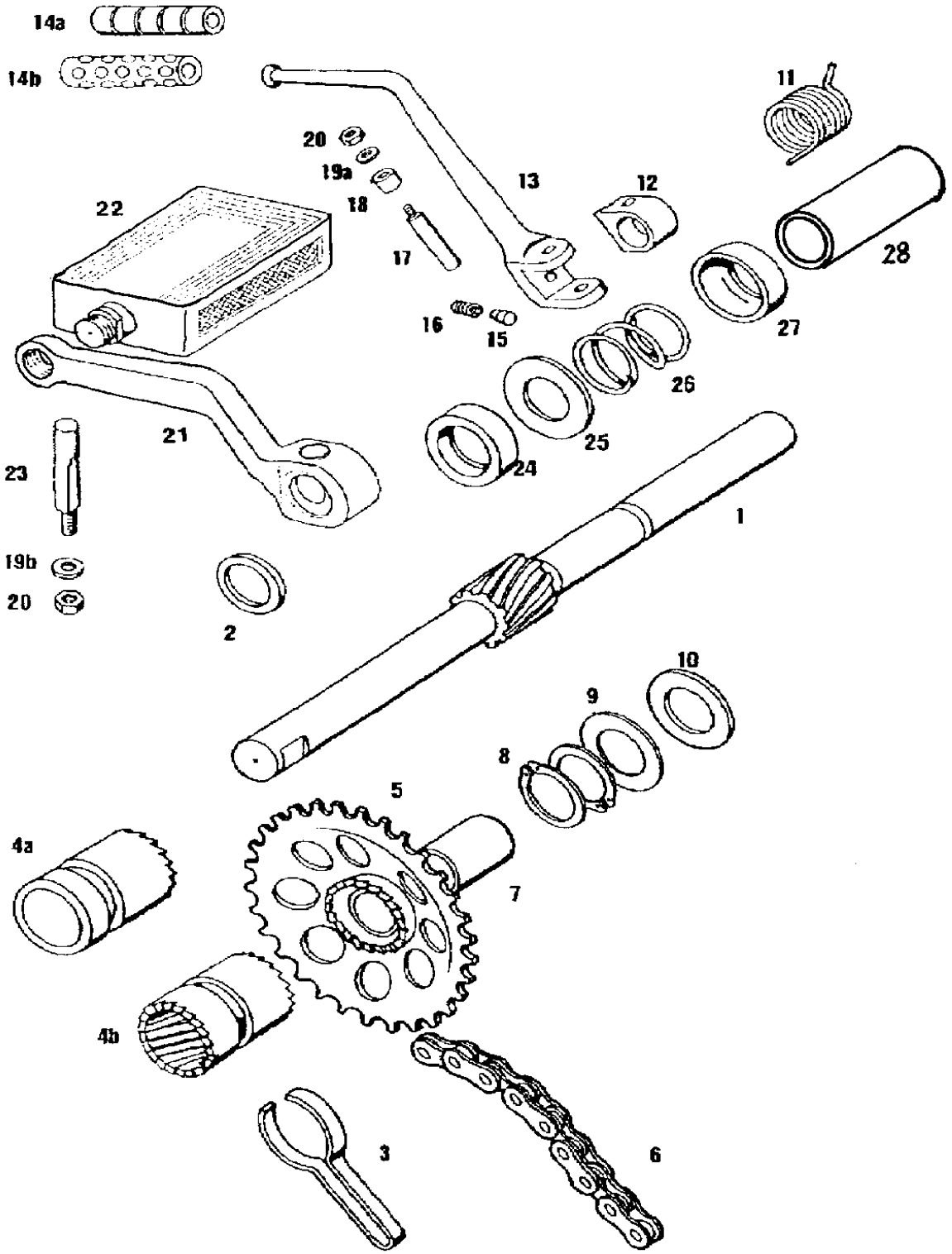
14a
14b
11
20
19a
18
13
12
22
17
28
16
15
27
26
21
25
23
24
1
19b
20
2
10
9
8
5
4a
7
4b
3
6

GROUP 4 STARTER MECHANISM

ITEM	*	PART	DESCRIPTION	A	B	C	D
1		223447	STARTERSHAFT-KICK				
1		230913	STARTERSHAFT-PEDAL				
2		205702	WASHER				
3		209048	CLAW COLLAR SPRING				
4	a	209566	CLAW COLLAR-KICK				
4	b	209047	CLAW COLLAR-PEDAL				
5		217584	CHAIN SPROCKET-25 TEETH				
6		217582	CHAIN (32 ROLLERS)				
7		223448	DISTANCE TUBE				
8		032073	STARTERSHAFT RING				
9		206391	SHIM 1.0MM				
10	P	209087	SHIM 0.2MM				
10	P	200175	SHIM 0.5MM				
11		223473	RETURN SPRING(KICKSTARTLEVER)				
12		221406	KICK START LEVER HUB				
13		221405	KICKSTART LEVER				
14	a	201487	RUBBER SLEEVE				
14	b	223602	RUBBER SLEEVE				
15		260216	THRUST BOLT				
16		260217	SPRING				
17		202726	KICK START LEVER PIN				
18		202723	DISTANCE TUBING				
19	a	202727	WASHER				
19	b	200185	WASHER				
20		031076	NUT				
21		230292	PEDAL ARMS (PAIR)				
22		222655	PEDALS (PAIR)				
23		206714	PIN				
24		200266	SEAL RING				
25		209224	WASHER				
26		209099	SPRING				
27		209096	CUP				
28		230915	DISTANCE TUBE				